SRS100

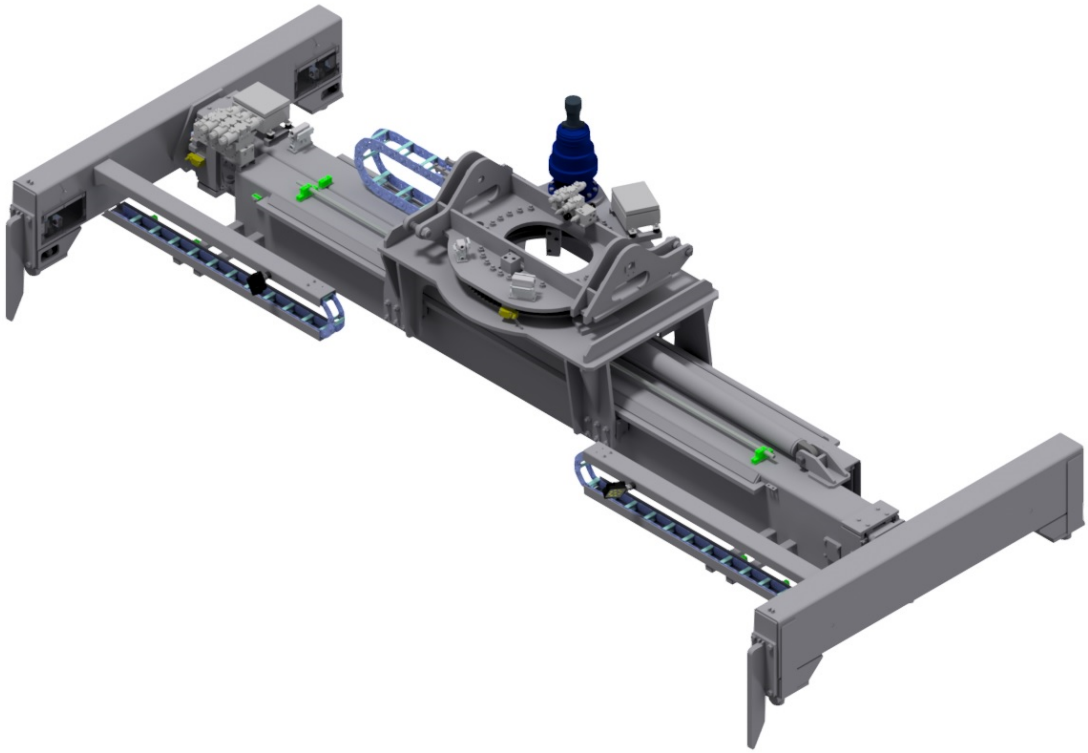

EMPTY CONTAINER HANDLING SPREADER

SRS100 is a telescopic top lift spreader for handling of empty ISO containers weighing up to 10 tonnes. SRS100 is designed for mounting on reach stackers.

- **Mechanical pile slope**
- **Hydraulic telescoping, sidelift and rotation**
- **Four pendular vertical ISO twistlocks**
- **Solenoid valves for all hydraulic functions**
- **Electrical and mechanical twistlock safety system**
- **LED indication lights**
- **LED work lights**

Mec Service Equipment di Rasparini Carlo s.n.c.
29010, Calendasco (Piacenza)
Zona industriale Pontetrebbia, via Piacenza 45
Mail: info@mecserviceitalia.it
Web: www.mecserviceitalia.it

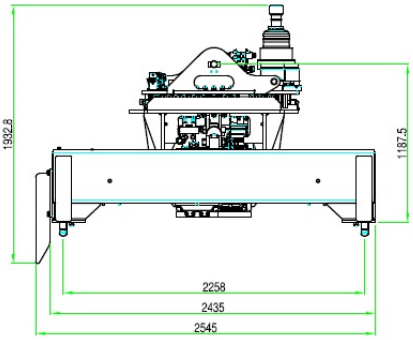

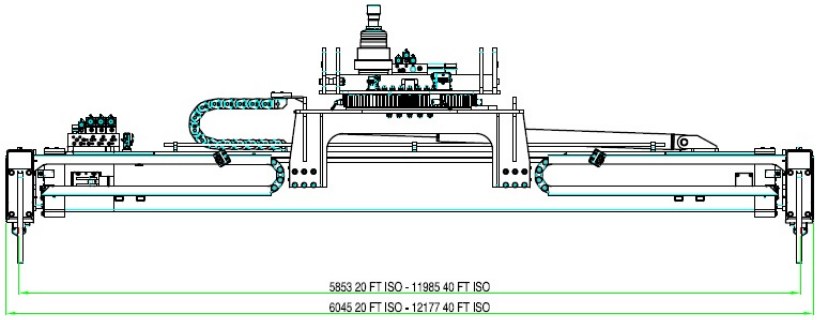

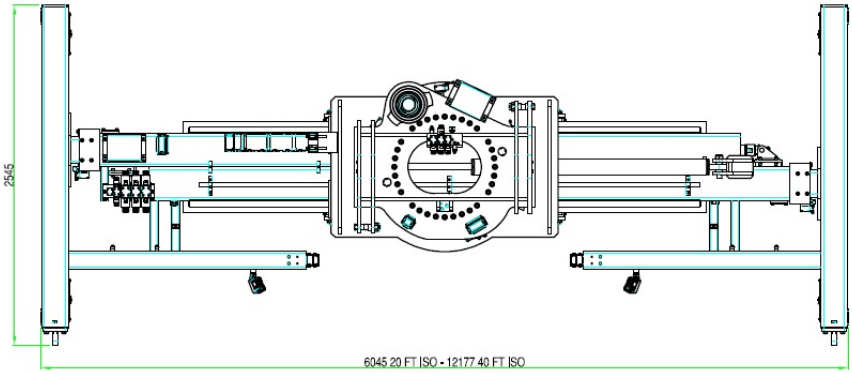

All specifications are subject to change without notice. A list of options enables you to adapt the product more precisely to your needs and further information is available on request

TECHNICAL SPECIFICATIONS

Lifting capacity (SWL)	***10'000 Kg ± 10% eccentric load***
Telescopic positions	***20 FT ISO / 40 FT ISO***
Telescoping speed (from 20 to 40 FT ISO)	***<= 20 sec (20°C tested)***
Telescoping speed (from 40 to 20 FT ISO)	***<= 25 sec (20°C tested)***
Rotation	***95° CW / 185° CCW***
Sideshift	***± 800 mm***
Mechanical pile slope	***± 2°***
Max working pressure	***160 bar***
Hydraulic flow	***40-60 L/min***
Electric control voltage	***24 VDC***
Lifting system	***Vertical ISO twistlocks***
Spreader weight	***5'300 Kg***
Colour	***Black grey RAL 7021 (150 µm th.)***

Mec Service Equipment di Rasparini Carlo s.n.c.
29010, Calendasco (Piacenza)
Zona industriale Pontetrebbia, via Piacenza 45
Mail: info@mecserviceitalia.it
Web: www.mecserviceitalia.it