SPRMFR8T



EMPTY CONTAINER HANDLING SPREADER

SPRMFR8T is an end lift spreader for empty ISO containers handling.

- **Mechanical pile slope**
- **Hydraulic bottom support to fit 8”/8.6”/9”/9.6” ISO container**
- **Two vertical pendular ISO twistlocks**
- **Solenoid valves for all hydraulic functions**
- **Electrical and mechanical twistlock safety system**
- **LED indication lights**
- **LED work lights**

TECHNICAL SPECIFICATIONS

Lifting capacity (SWL)	***8’000 Kg***
Sideshift	***not available***
Mechanical pile slope	***45 mm***
Max working pressure	***160 bar***
Hydraulic flow	***40-60 L/min***
Electric control voltage	***24 VDC***
Lifting system	***Two vertical twistlocks***
Type of stacking	***Normal and block stacking***
Spreader weight	***2’470 Kg***
Colour	***Black grey RAL 7021 (150 µm th.)***

Mec Service Equipment srl
29010, Calendasco (Piacenza)
Zona industriale Pontetrebbia, via Piacenza 45
Mail: info@mecserviceitalia.it
Web: www.mecservice-equipment.com







All specifications are subject to change without notice. A list of options enables you to adapt the product more precisely to your needs and further information is available on request

Mec Service Equipment srl
29010, Calendasco (Piacenza)
Zona industriale Pontetrebbia, via Piacenza 45
Mail: info@mecserviceitalia.it
Web: www.mecservice-equipment.com

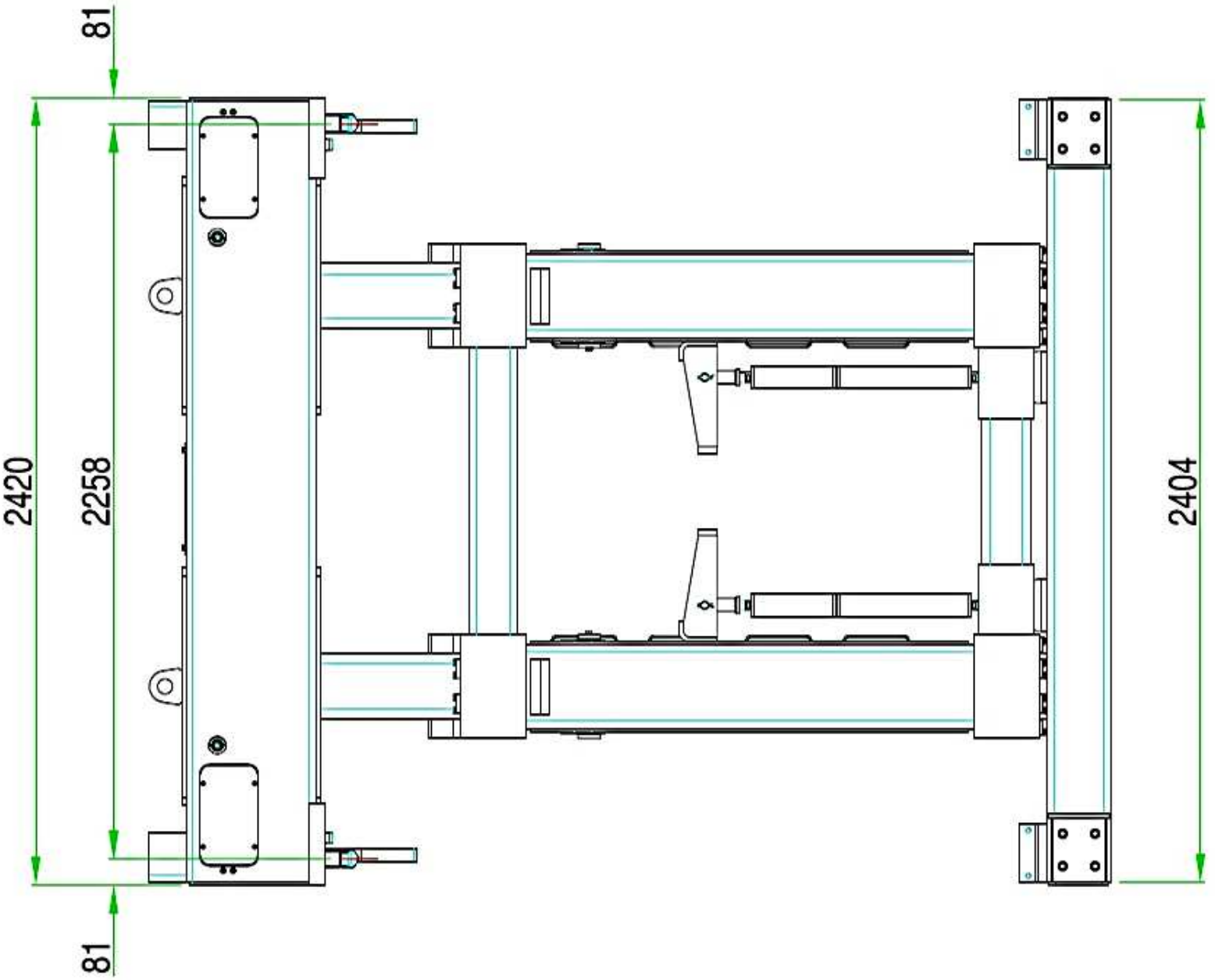
81
2420
2258
2404
81

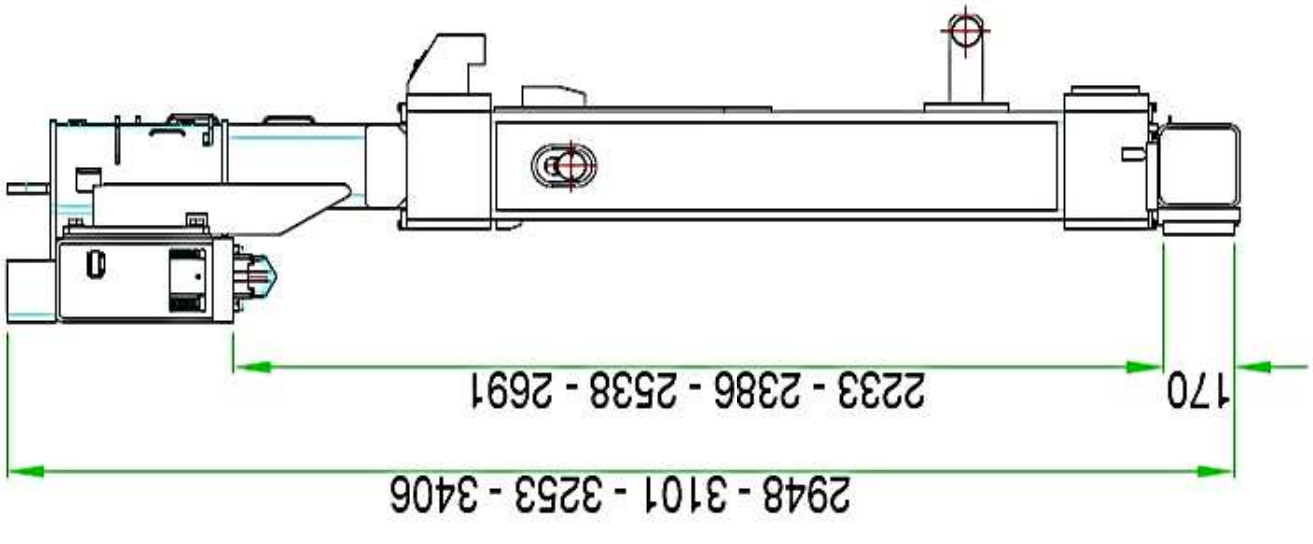
2233 - 2386 - 2538 - 2691
170
2948 - 3101 - 3253 - 3406