LADEN CONTAINER HANDLING SPREADER MOD SRS 450

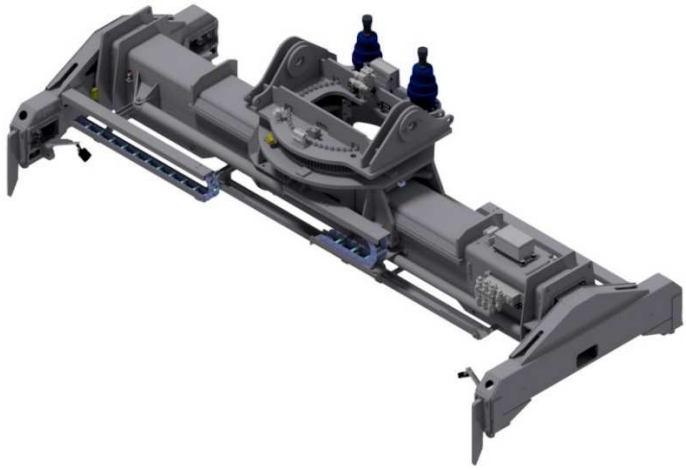

TECHNICAL FEATURES

Model SRS450
Container type 20-40 FT ISO (30 FT ISO optional)
Dimensions 6'045 (20 FT ISO)
12177 (40 FT ISO) – Length
2’326 – Height
2'508 – Width
Performances 1,5 s – Twist-lock rotation
14 s – From 20 to 40 ft ISO
16 s – From 40 to 20 ft ISO
Sidelift +/- 800 mm
Rotation 185°/95°
Electrical 24 VDC – Supply voltage
24 V DC – Auxiliary control voltage
IP 54 – Electrical protection class
Hydraulics 160 bar – Max operating pressure
50 °C – Medium operating oil temperature
SWL 45’000 Kg
Weight 8’500 Kg
Top coating
Sandblasting SA 2,5
Rust preventer yellow EPOX
Black (RAL 9005) final coat
Min paint thickness 150 µm